Helicon®

Vibro Systems

GEOTECH CONSTRUCTION SOLUTIONS,
GROUND IMPROVEMENT & DEEP FOUNDATIONS

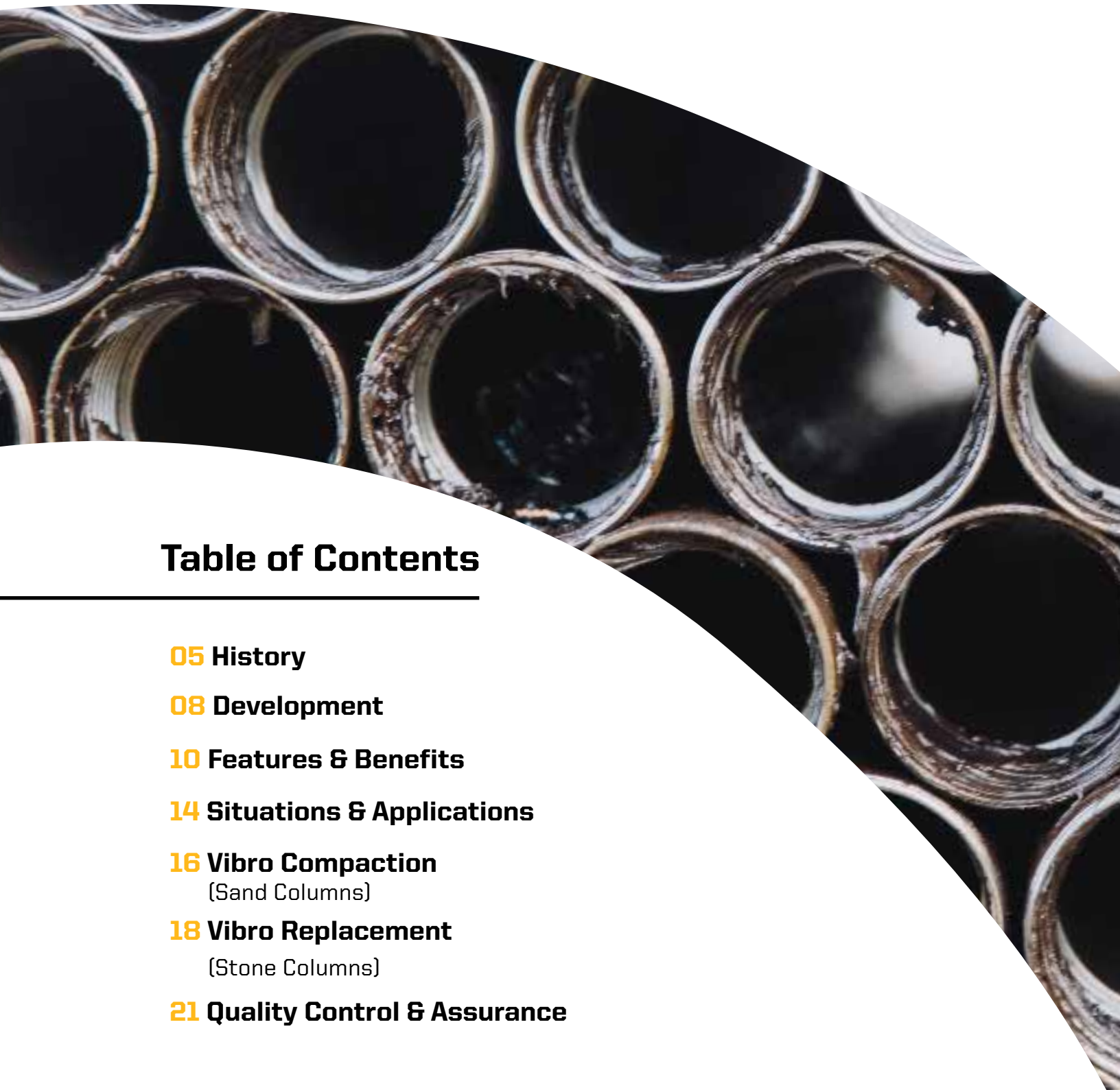

Table of Contents

Fast and economical processes are the future in ground improvement solutions.

GROUND IMPROVEMENT SOLUTIONS THAT MATTER.

Whether planning ahead or dealing with foundation problems at hand, Helicon creates a clear plan of action and executes flawlessly to earn your trust and confidence in our team and ground improvement services.

We are driven by a desire to be the best in the industry. In speed, safety, and quality we don't just meet the standard, we set the standard and exceed our client's expectations every step of the project. We extensively train and invest in our ground improvement teams, equipping them with the state-of-the-art tools and expertise needed to execute a flawless and professional experience.

History

The first vibratory method used for soil stabilization and deep foundations solutions was developed in Europe in the 1930s. Known now as Vibro Compaction, also referred to as Vibroflotation, this classic technique paved the way for the development of Vibro Replacement (stone columns).

In the mid 1930's, the use of in place vibrators to densify soil was patented in Germany. Although evidence of the first sand pile usage points to the French Military Engineers in the 19th century, the modern origins truly began in Germany. Russian engineer Sergei Stevermann and Wilhelm Degen had an idea for compacting cohesionless soils both above and below the water table. Both agreed the best method would achieve effective compaction only when the vibrator was placed into the soil at the location the compaction was required. The vibratory equipment would have to be in direct contact with the soil while emitting its horizontal vibratory forces.

Because of their earlier work together, both Steverman and Degen developed their machines on a similar theory. Both believed that vibrations of an appropriate form could eliminate the interangular friction of cohesionless soils so that those that were initially loose could flow by gravity into a dense state. A poker vibrator was developed that hung vertically from a crane boom. This allowed the poker to penetrate to depths greater than those obtained by surface compaction. The poker, which is now known as a vibroflot, can also operate efficiently below ground-water thus compacting soils normally inaccessible without drainage.

QUALITY WORK, GUARANTEED TO LAST.

Development

Vibro Replacement

Vibro Compaction method reaches its technical limits where the fines content is high (i.e. in excess of 15 to 20%) as the fine particles cannot respond to the vibration and necessitates the need for externally introduced reinforcement material such as gravels or stones. To overcome the limitations of the Vibro Compaction method, Vibro Replacement method was first developed in 1956. In this method, a hole is created in the ground and is filled with coarse aggregate such as stones, section by section. The coarse aggregate is then densified along with the surrounding soil by repetitive use of the depth vibrator. This process produces Vibro Stone Columns that are integral to the surrounding soil.

Vibroflot

The vibroflot is the common link between vibro densification techniques. The vibroflot is used in both Vibro Compaction and Vibro Replacement techniques. In the early stages of development, it was discovered that a simple vibrator range limited the rand of compaction soils. In addition, it was economically impractical to extend this range by complex machines with vibration parameters adjustable to in situ resonant frequencies. However, most recent developments have been aimed at matching machine characteristics more closely with soil properties by providing alternating frequencies, amplitudes, and power levels within a single machine.

Recent developments have also been made in casing drivers, pile drivers, and vibratory hammers, which have lead to these being classified as vibroflots. This is an incorrect term for these machines. The vibrator including a top mounted motor produces a vertical vibration in the length of a continuous tube. This type of set-up produces excellent results in penetration of frictional soils, but does not compact in radial directions, thus if used for vibro densification techniques, the centers must be very closely spaced.

Features

Vibro Compaction

- Fast and economical process
- Method allows to utilize standard shallow footings
- Result of compaction can easily be checked
- Noise and vibration level are low
- Environmentally friendly as natural and in situ martials are used
- Can be carried out to almost any depth
- Suited to soil profiles with a high water table

Expected Results

Ground Type	Relative Effectiveness
SANDS	EXCELLENT
SILTY SANDS	MARGINAL TO GOOD
SILTS	POOR
CLAYS	NOT APPLICABLE
MINE SPOILS	GOOD (IF CLEAN GRANULAR)
DUMPED FILL	DEPENDENT ON NATURE OF FILL
GARBAGE	NOT APPLICABLE

Vibro Replacement (Stone Columns)

- Fast and economical process
- Allows to utilize standard shallow footings
- Noise and vibration level are low
- Environmental friendly as natural martials are used
- Can be carried out to depth of more than 20m
- Suited to a wide range of soil profiles with a high water table
- The aggregates is fed directly to the tip of the vibrator creating a continuous stone column

Expected Results

	Relative Effectiveness	
Ground Type	**Densification**	**Reinforcement**
SANDS	EXCELLENT	VERY GOOD
SILTY SANDS	VERY GOOD	VERY GOOD
SILTS	GOOD	EXCELLENT
CLAYS	MARGINAL	EXCELLENT
MINE SPOILS	EXCELLENT, DEPENDING ON GRADATION	GOOD
DUMPED FILL	GOOD	GOOD
GARBAGE	NOT APPLICABLE	NOT APPLICABLE


CAT

Benefits

The deep vibro techniques present a very versatile ground-improvement method that can be adjusted to a wide variety of soil conditions and foundation requirements. Its execution is comparatively fast even if large volumes of soil are to be improved and subsequent structural works can follow very quickly. The soil improvement enables the contractor to utilize standard shallow footings, which, in turn, leads to additional savings. Another advantage is the environmental friendliness of the deep vibro techniques, as natural and in situ materials are used. In addition, only a comparatively small quantity of soil is removed during the process. Another advantage of using the vibro process is that it mitigates having to deal with possible future soil issues or sinkholes. The vibro process will trigger any sort of weak soil problems and/or dormant sinkhole conditions, allowing them to fix them prior to building at a fraction of the cost verse fixing a sinkhole problem arises after the structure is built. Both Vibro Compaction & Replacement offer a technically-proven and cost effective alternate to deep foundations, allowing a variety of structures to be supported on shallow spread footings. These structures include: Residential, Commercial and Industrial Facilities; Office Buildings, Schools and Hospitals; Wastewater Treatment Plants; Tanks; Bridges and Bridge Approaches, Highways and Overpasses; Dams; Embankments.

Advantages of Vibro Systems

- **Pinpoint treatment**
- **Speed of installation**
- **Decrease risks of future soil issues and/or settlement due to sinkholes**
- **Wide Application Range**
- **Effective in variety of soil conditions**
- **Can be performed in very tight access and low headroom conditions**
- **Non-hazardous**
- **No waste spoil disposal by utilizing the dry bottom feed method vs wet top feed method**
- **No need to connect to footing or column**
- **Non-destructive and adaptable to existing foundations**
- **Economic alternative to removal and replacement or piling**
- **Able to reach depths unattainable by other methods**
- **Enhanced control and effectiveness of in situ treatment with Denver System**

Benefits to Our Clients & Engineers

- **Quality/Decreased Risk**
- **Speed/Quick Timeline/Schedule**
- **Cost**

Situations

Vibro Compaction

Vibro Compaction is used to increase the bearing capacity of foundations and to reduce their settlements. Another application is the densification of sand to mitigate the liquefaction potential in earthquake prone zones. Vibro Compaction may be used as a ground improvement technique to support all types of structures from embankments to chemical plants. The use of Vibro compaction mainly depends on the type of granular soil to be compacted. Depths down to 65 m have been improved so far by using the Vibro Compaction technique.

Vibro Replacement

The unique characteristic of the Vibro Replacement technique is that it is able to treat a wide range of weak soils ranging from loose silty sands, soft marine clays, ultra soft silts and clays from mine tailings, garbage fills to peaty clays.

The structures supported by Vibro Replacement technique have ranged from simple earth embankments, modern expressway embankments, bridge approaches, high speed railway embankments, marine and offshore structures, seaport / airport facilities, power plant structures, chemical plants, sewage treatment plants to large storage tanks. The treatment purpose has been to ensure stability and bearing capacity and to limit settlements. In earthquake prone regions, it has also been used to mitigate liquefaction potential.

Applications

Vibro Compaction & Vibro Replacement

- Buildings
- Airport taxiways and runways
- Chemical plants
- Storage tanks & Silos
- Pipelines
- Wharf structures
- Bridge abutments and approaches
- Road and Railway embankments
- Roads
- Both land/offshore applications
- Commercial Buildings
- Office Buildings
- Residential
- Industrial Facilities
- Schools and Hospitals
- Wastewater Treatment Plants
- Tanks
- Bridges and Bridge Approaches
- Highways and Overpasses
- Dams
- Embankments

Vibro Compaction

- Radial vibrator is most effective at expanding a cavity
  - May use jetting water (wet top feed method)
  - Can eliminate water and use compressed air (dry bottom feed)
- Cavity is backfilled with compacted sand or gravel
- Column diameter varies with soil stiffness

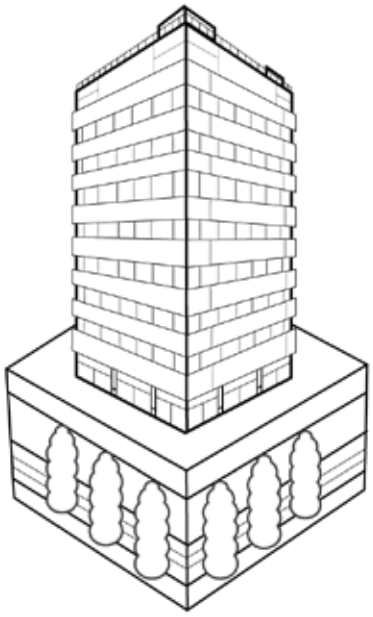

Soil Types Available

- Vibro Compaction is used for granular soils with less than:
  - 12% silt fines
  - 2% clay fines
- Important: more than 2% clay fines in sand will prevent depth compaction
  - Always have stone backfill contingency

The Process

- Penetration: By vibration and the flushing of water and/or air, the vibroflot penetrates to the desired depth
- Compaction: The vibroflot is recovered a certain vertical distance after a verified holding time or buildup of resistance from the compacted ground.
- Finish: Immediate top layers may be leveled, impact compacted, or roller compacted to ensure a ready-to-build surface.

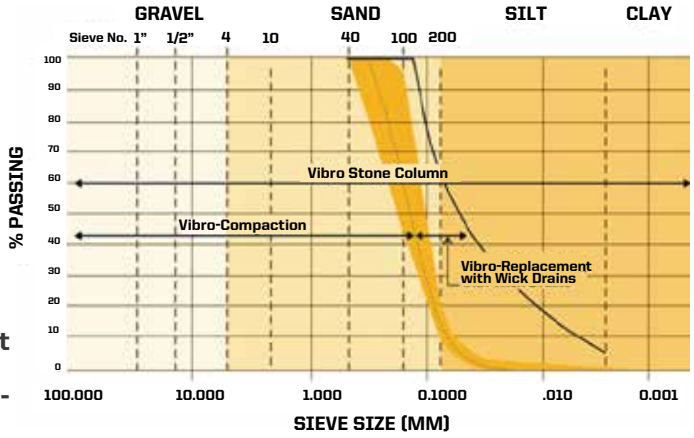

Vibro Compaction Process

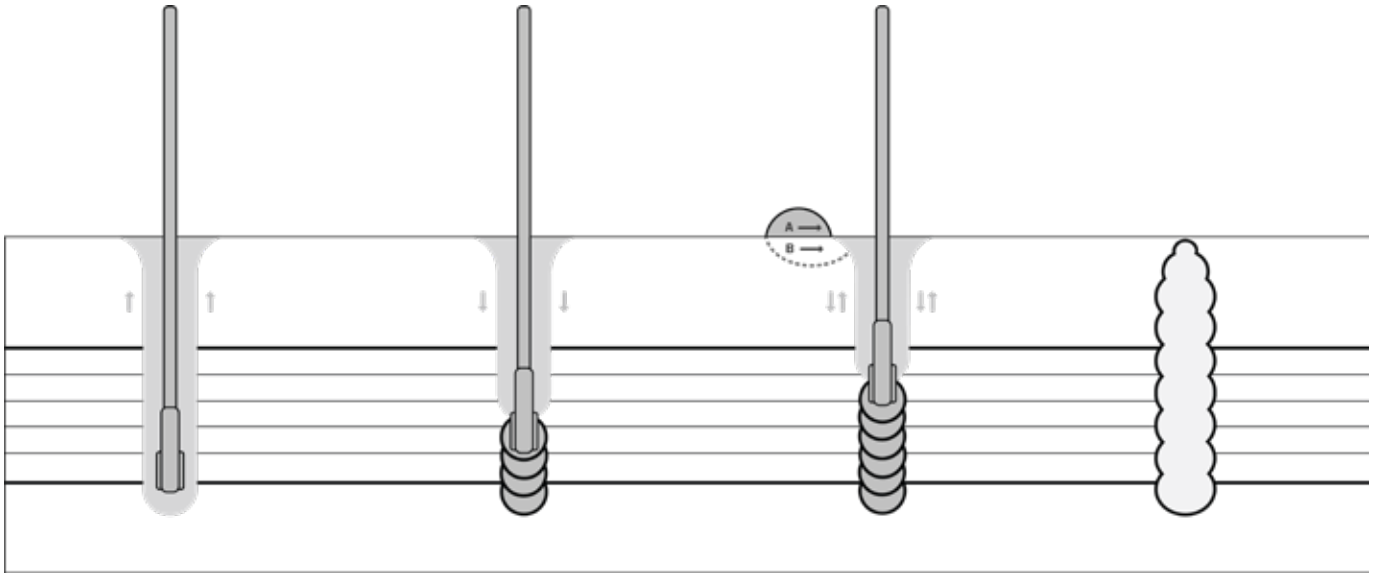

Penetration

At full water pressure the vibrator penetrates to design depth and is surged up and down as necessary to agitate sand, remove fines, and form an annular gap around the vibrator. The water flow is then stopped or reduced.

Compaction

Under the action of induced horizontal forces the soil particles surrounding the base of the vibrator are rearranged to a denser state of compaction. The vibrator is raised incrementally as compaction is achieved.

Refilling

During compaction either imported (A) or in situ (B) material is introduced. If in situ material is used, the surface area being compacted may be lowered 5% to 15% of the treated depth.

Completion

With an economical layout of compaction probes, an optimum improvement can be achieved. The surface of the improved area is then releveled and densified with a surface compactor.

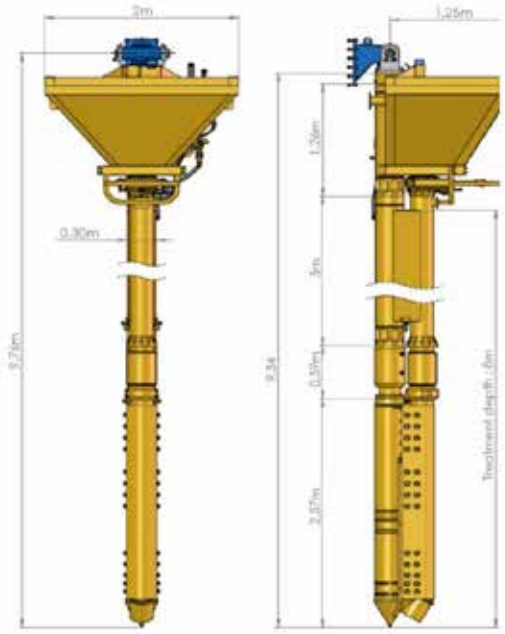

VL18BFS for Excavator

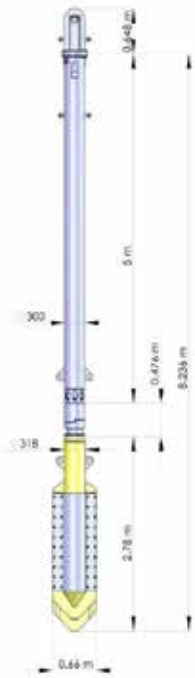

Vibrolance VL18

Vibro Replacement
(Stone Columns)

- Vibro Stone Columns are designed for use in clay
  - Shear strength > 250 pounds per square foot
  - If shear strength is less than 250 pounds per square foot, vibro stone columns can still use VR when layer thickness does not exceed ~5 feet
- VR use in sand yields double benefit
  - Compaction of sand, and
  - Reinforcement (stiff springs)
  - Wick drains can help increase compaction

349 L CAT

Vibro Stone Columns Process

- Bottom Feed Stone Columns:
  - The vibroflot penetrates with the help of vibration and air flushing. (Sometimes a minimal water lubrication is helpful to overcome high friction from the soils)
  - The stones are introduced via a tremie pipe along with the vibroflot and the aid of pressurized air.
  - The vibroflot is frequently moved up and down in order to form and compact a column, Thereby, the surrounding ground is horizontally compressed and improved. The column is able to support high vertical loads.

EXCAVATOR MOUNTED
(FREE-HANGING)

Dry bottom feed is useful for contaminated sites, or sites where water control will be difficult or impossible. Dry bottom feed is also preferred when installation depths exceed 50 feet.

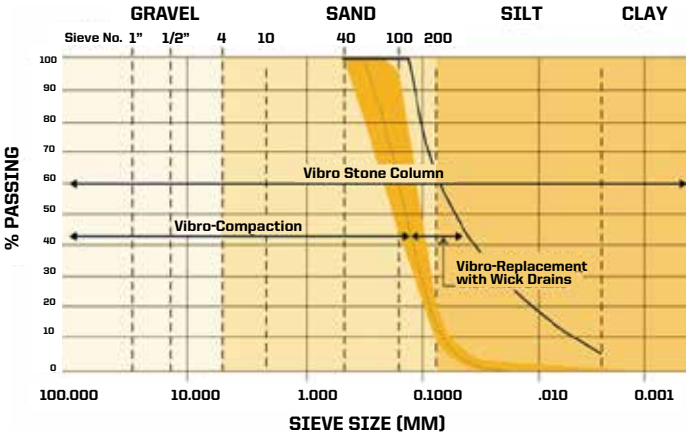

VIBROLANCE		VL18	VL40	VL110
ECCENTRIC MOMENT	mkg1	.8	4.01	1.2
VIBROLANCE POWER	KW/HP	113/154	135/183	202/274
FREQUENCYH	z/rpm5	0/3000	30/1800	28/1680
CENTRIFUGAL FORCE	kN	1811	45	353
WATER JETTING SYSTEM		OPTION	OPTION	OPTION
AIR JETTING SYSTEM		OPTION	OPTION	OPTION
RECOMMENDED POWER PACK				
MODEL2		40	240	400

Vibro Replacement Process

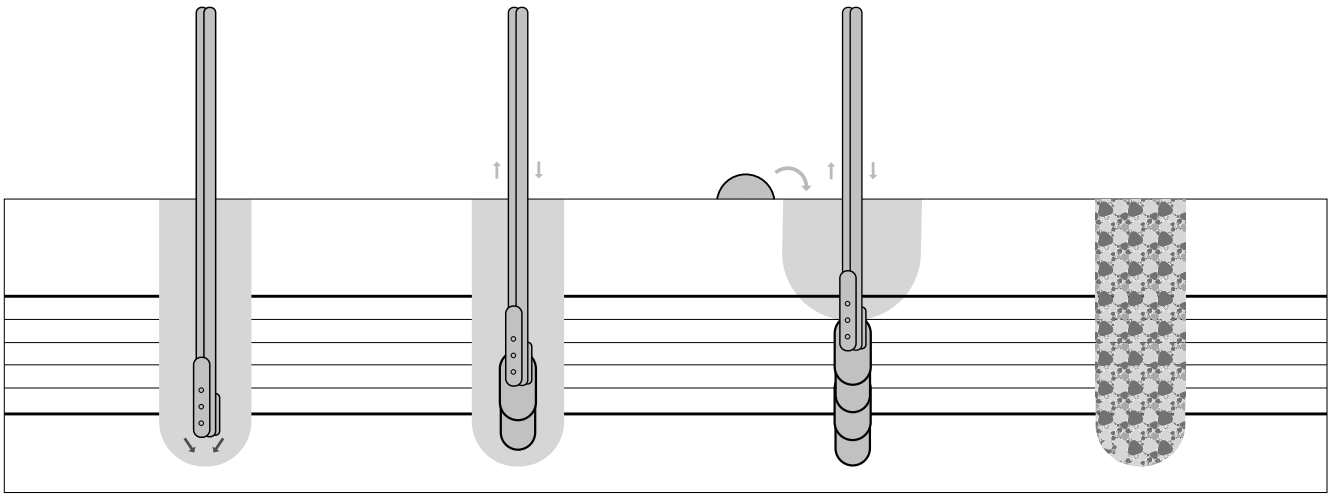

Penetration

Assisted by water jetting, the vibrator penetrates to design depth under its own weight. The water jets are then adjusted to maintain an annular space around the vibrator.

Replacement

Crushed stone backfill is introduced in discrete lifts from the ground surface. Repenetration of each lift, and the horizontal forces of the vibrator, laterally compacts the stone against the surrounding soil.

Completion

This process is repeated up to ground level, forming a well-compacted, tightly-interlocked stone column surrounded by soil of enhanced density.

GROUND BREAKING VIBRO SYSTEMS SOLUTIONS.

At Helicon, we use the safest and most accurate ground improvement methods to densify loose soils. The process and methods used can vary based on the type of soils and additives that are needed. From sandy or gravelly to silts and clays, we ensure the correct additives are used so the best mixture is created for your project.

Quality Control & Assurance

Foundation engineering is the civil engineering discipline with the highest potential for variance between assumed behavior and actual as-built behavior. This stems from the large uncertainties in the characteristics of the building material, the in-situ soil. No matter how much field and laboratory exploration data is available, the unknowns and uncertainties will always be greater than for steel, concrete and other construction materials.

Detailed measurements and observations are therefore utmost importance and an efficient quality assurance/control system is mandatory. Modern data acquisition systems intelligently combined with equipment built to allow for the exact measurement of process parameters (such as a precise gravel consumption by volume over depth) are now available.

Monitoring System

TYPES OF MEASUREMENT

The instrumentation on the job site simply, reliably and accurately controls, measures and records:

- **Depth**
- **Inclination**
- **Hydraulic pressure**
- **Vibration frequency and amplitude**
- **Soil particle speed**

Helicon®

HeliconCommercial.com